REVISION	DATE	DRAWN BY	COMMENT
AA	5/17/2024	Ethan Zifzal	Initial Release of Schematic

Notes

THE UNIVERSITY OF AKRON

SHEET SIZE	TITLE	PART NUMBER	REVISION
ANSI B	STM32F405 MCU Template	EL#####	AA
	LAST UPDATE 4/17/2026 5:45:59 PM	SHEET 1 of 4	

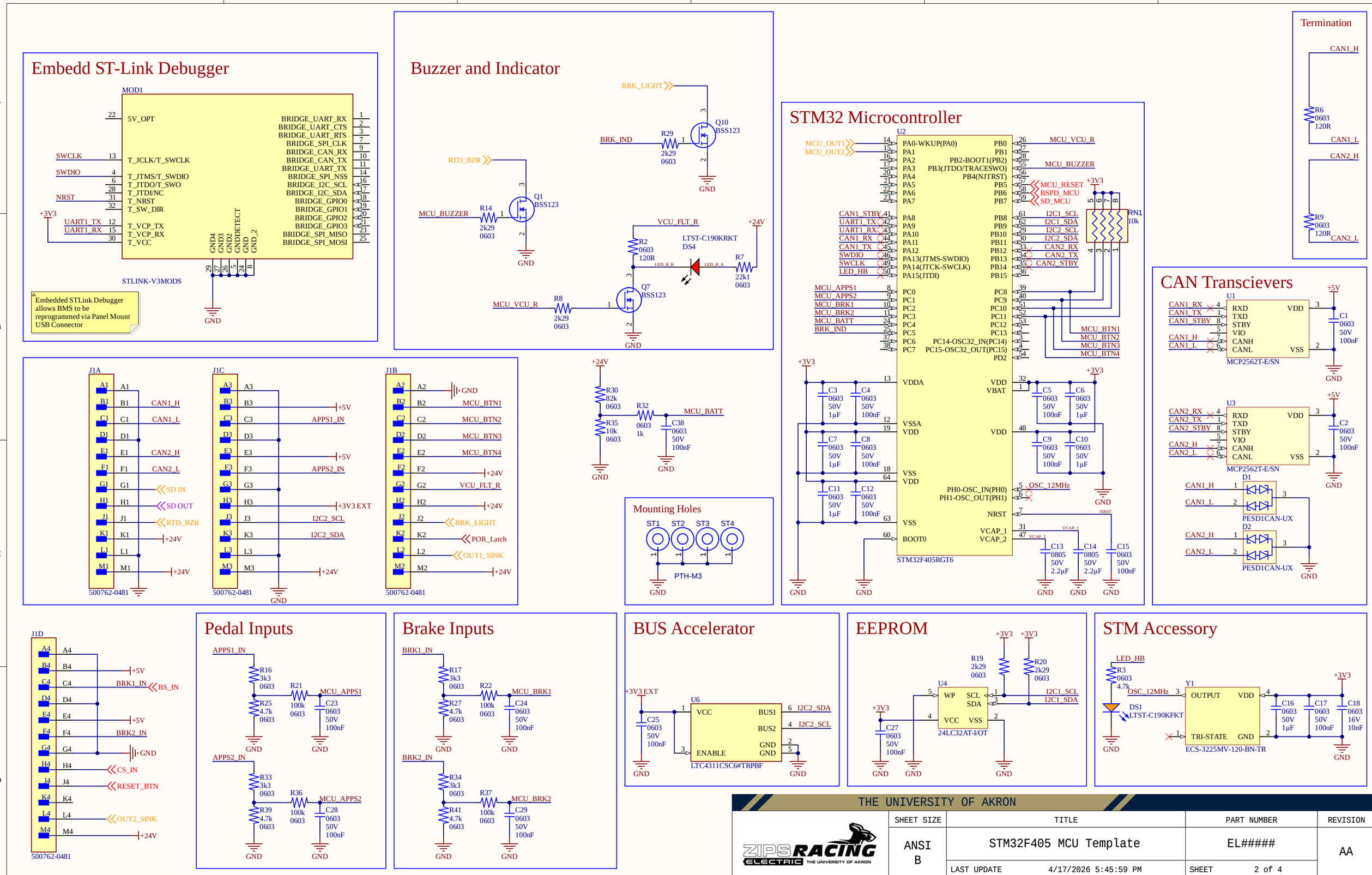
Embedd ST-Link Debugger
MOD1
5V_OPT
T_JCLK/T_SWCLK
T_JTMS/T_SWDIO
T_JTDO/T_SWO
T_JTDI/NC
T_NRST
T_SW_DIR
T_VCP_TX
T_VCP_RX
T_VCC
BRIDGE_UART_RX
BRIDGE_UART_CTS
BRIDGE_UART_RTS
BRIDGE_SPI_CLK
BRIDGE_CAN_RX
BRIDGE_CAN_TX
BRIDGE_UART_TX
BRIDGE_SPI_NSS
BRIDGE_I2C_SCL
BRIDGE_I2C_SDA
BRIDGE_GPIO0
BRIDGE_GPIO1
BRIDGE_GPIO2
BRIDGE_GPIO3
BRIDGE_SPI_MISO
BRIDGE_SPI_MOSI
SWCLK
SWDIO
NRST
+3V3
UART1_TX
UART1_RX
GND4
GND3
GND2
GNDDETECT
GND
GND_2
STLINK-V3MODS
GND
Embedded STLink Debugger allows BMS to be reprogrammed via Panel Mount USB Connector
Buzzer and Indicator
BRK_LIGHT
Q10
BSS123
BRK_IND
R29
2k29
0603
GND
RTD_BZR
Q1
BSS123
MCU_BUZZER
R14
2k29
0603
GND
VCU_FLT_R
+24V
R2
0603
120R
LTST-C190KRKT
DS4
LED_R_K
LED_R_A
R7
22k1
0603
Q7
BSS123
MCU_VCU_R
R8
2k29
0603
GND
STM32 Microcontroller
U2
MCU_OUT1
MCU_OUT2
PA0-WKUP(PA0)
PA1
PA2
PA3
PA4
PA5
PA6
PA7
PA8
PA9
PA10
PA11
PA12
PA13(JTMS-SWDIO)
PA14(JTCK-SWCLK)
PA15(JTDI)
PB0
PB1
PB2-BOOT1(PB2)
PB3(JTDO/TRACESWO)
PB4(NJTRST)
PB5
PB6
PB7
PB8
PB9
PB10
PB11
PB12
PB13
PB14
PB15
PC0
PC1
PC2
PC3
PC4
PC5
PC6
PC7
PC8
PC9
PC10
PC11
PC12
PC13
PC14-OSC32_IN(PC14)
PC15-OSC32_OUT(PC15)
PD2
VDDA
VSSA
VDD
VSS
VBAT
BOOT0
PH0-OSC_IN(PH0)
PH1-OSC_OUT(PH1)
NRST
VCAP_1
VCAP_2
STM32F405RGT6
MCU_VCU_R
MCU_BUZZER
MCU_RESET
BSPD_MCU
SD_MCU
CAN1_STBY
CAN1_RX
CAN1_TX
CAN1_H
CAN1_L
CAN2_RX
CAN2_TX
CAN2_STBY
CAN2_H
CAN2_L
I2C1_SCL
I2C1_SDA
I2C2_SCL
I2C2_SDA
SWDIO
SWCLK
LED_HB
MCU_APPS1
MCU_APPS2
MCU_BRK1
MCU_BRK2
MCU_BATT
MCU_BTN1
MCU_BTN2
MCU_BTN3
MCU_BTN4
RN1
10k
OSC_12MHz
Termination
R6
0603
120R
R9
0603
120R
CAN1_H
CAN1_L
CAN2_H
CAN2_L
CAN Transcievers
U1
U3
RXD
TXD
STBY
VIO
CANH
CANL
VDD
VSS
MCP2562T-E/SN
PESD1CAN-UX
D1
D2
J1A
J1C
J1B
500762-0481
SD IN
SD OUT
RTD_BZR
+24V
+5V
APPS1_IN
APPS2_IN
+3V3 EXT
I2C2_SCL
I2C2_SDA
BRK_LIGHT
POR_Latch
OUT1_SINK
VCU_FLT_R
R30
82k
0603
R35
10k
0603
R32
0603
1k
C38
0603
50V
100nF
Mounting Holes
ST1
ST2
ST3
ST4
PTH-M3
J1D
BRK1_IN
BS_IN
BRK2_IN
CS_IN
RESET_BTN
OUT2_SINK
Pedal Inputs
APPS1_IN
APPS2_IN
R16
3k3
0603
R21
100k
0603
R25
4.7k
0603
C23
0603
50V
100nF
MCU_APPS1
R33
3k3
0603
R36
100k
0603
R39
4.7k
0603
C28
0603
50V
100nF
MCU_APPS2
Brake Inputs
BRK1_IN
BRK2_IN
R17
3k3
0603
R22
100k
0603
R27
4.7k
0603
C24
0603
50V
100nF
MCU_BRK1
R34
3k3
0603
R37
100k
0603
R41
4.7k
0603
C29
0603
50V
100nF
MCU_BRK2
BUS Accelerator
+3V3 EXT
U6
VCC
ENABLE
BUS1
BUS2
GND
LTC4311CSC6#TRPBF
C25
0603
50V
100nF
EEPROM
U4
WP
SCL
SDA
VCC
VSS
24LC32AT-I/OT
R19
2k29
0603
R20
2k29
0603
C27
0603
50V
100nF
STM Accessory
LED_HB
R3
0603
4.7k
DS1
LTST-C190KFKT
Y1
OUTPUT
TRI-STATE
ECS-3225MV-120-BN-TR
C16
0603
50V
1µF
C17
0603
50V
100nF
C18
0603
16V
10nF
THE UNIVERSITY OF AKRON
ZIPS RACING ELECTRIC
SHEET SIZE
ANSI B
TITLE
STM32F405 MCU Template
PART NUMBER
EL#####
REVISION
AA
LAST UPDATE
4/17/2026 5:45:59 PM
SHEET
2 of 4

+5V Regulation (8V - 28V) @ 1A

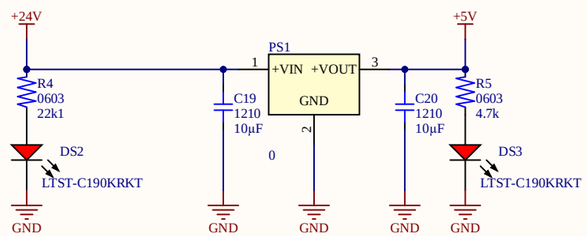

+3V3 Regulation

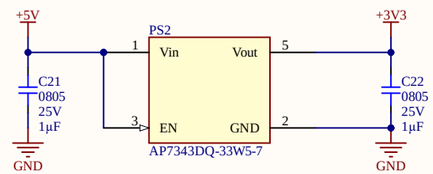

+3V3 External

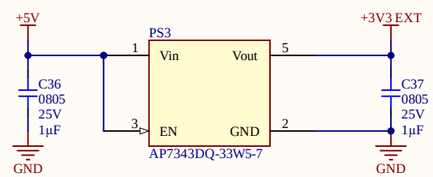

Power Output Control

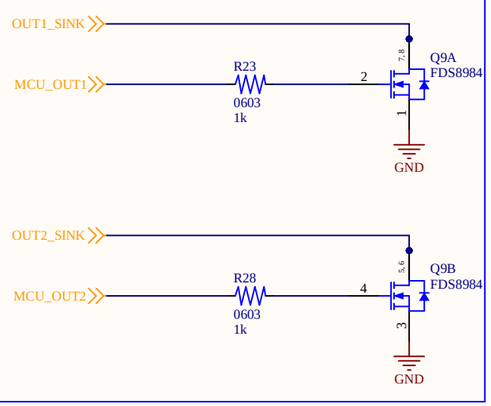

Shutdown Loop Control

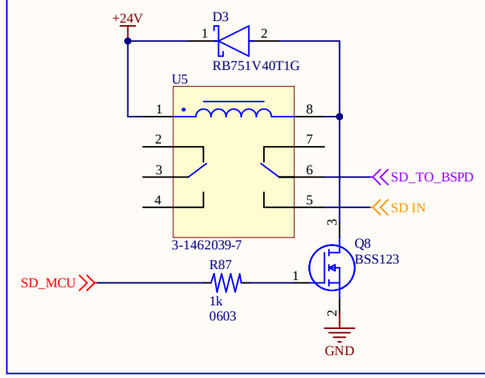

THE UNIVERSITY OF AKRON

SHEET SIZE	TITLE	PART NUMBER	REVISION
ANSI B	STM32F405 MCU Template	EL#####	AA
	LAST UPDATE 4/17/2026 5:46:00 PM	SHEET 3 of 4	

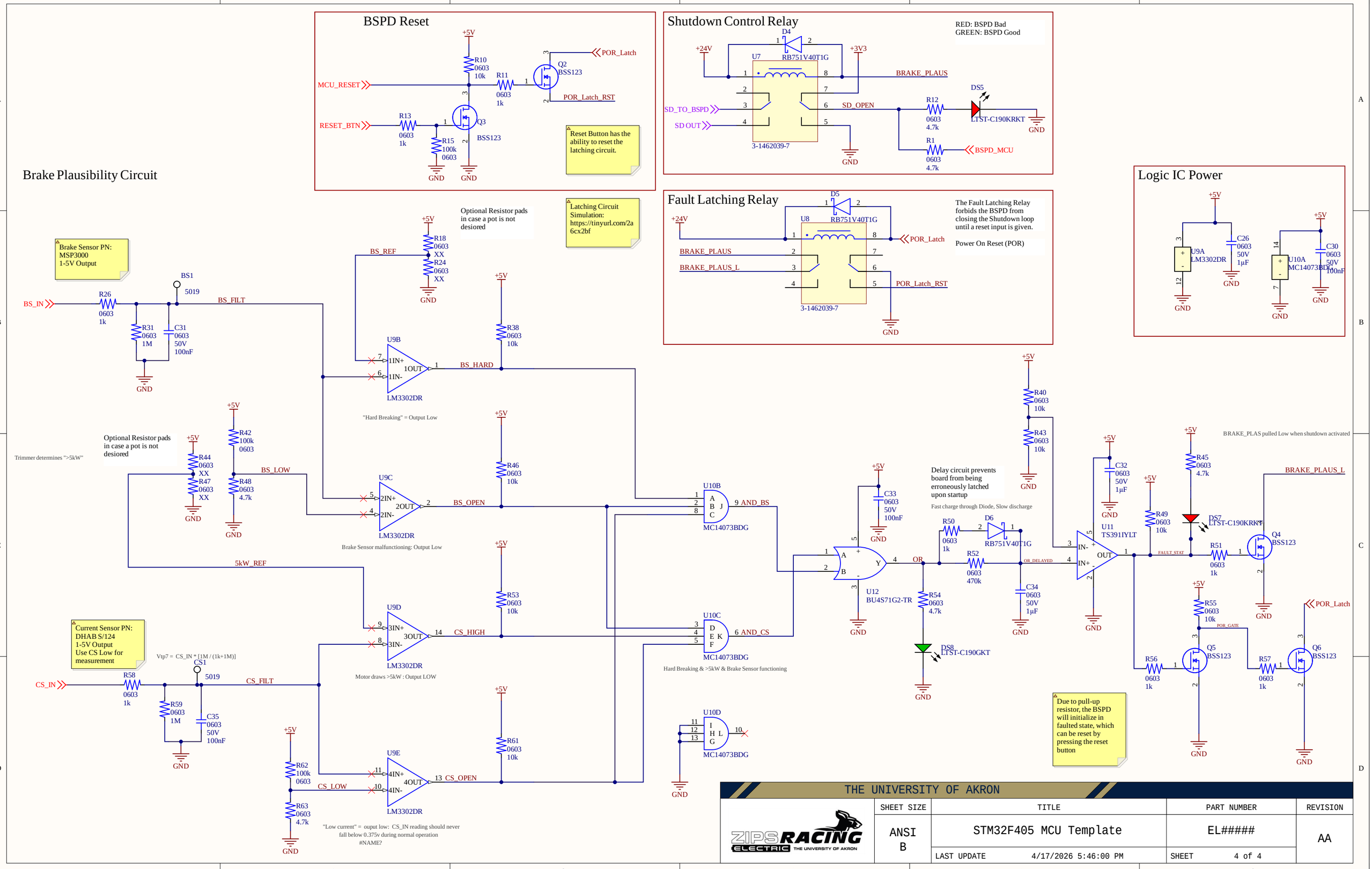
BSPD Reset
Reset Button has the ability to reset the latching circuit.
Shutdown Control Relay
RED: BSPD Bad
GREEN: BSPD Good
Fault Latching Relay
The Fault Latching Relay forbids the BSPD from closing the Shutdown loop until a reset input is given.
Power On Reset (POR)
Logic IC Power
Brake Plausibility Circuit
Brake Sensor PN: MSP3000 1-5V Output
Latching Circuit Simulation: https://tinyurl.com/2a6cx2bf
Optional Resistor pads in case a pot is not desiored
"Hard Breaking" = Output Low
Trimmer determines ">5kW"
Brake Sensor malfunctioning: Output Low
Motor draws >5kW : Output LOW
Hard Breaking & >5kW & Brake Sensor functioning
Current Sensor PN: DHAB S/124 1-5V Output Use CS Low for measurement
Vtp7 = CS_IN * [1M / (1k+1M)]
"Low current" = ouput low: CS_IN reading should never fall below 0.375v during normal operation
#NAME?
Delay circuit prevents board from being erroneously latched upon startup
Fast charge through Diode, Slow discharge
BRAKE_PLAS pulled Low when shutdown activated
Due to pull-up resistor, the BSPD will initialize in faulted state, which can be reset by pressing the reset button
THE UNIVERSITY OF AKRON
ZIPS RACING ELECTRIC THE UNIVERSITY OF AKRON
SHEET SIZE
ANSI B
TITLE
STM32F405 MCU Template
PART NUMBER
EL#####
REVISION
AA
LAST UPDATE 4/17/2026 5:46:00 PM
SHEET 4 of 4